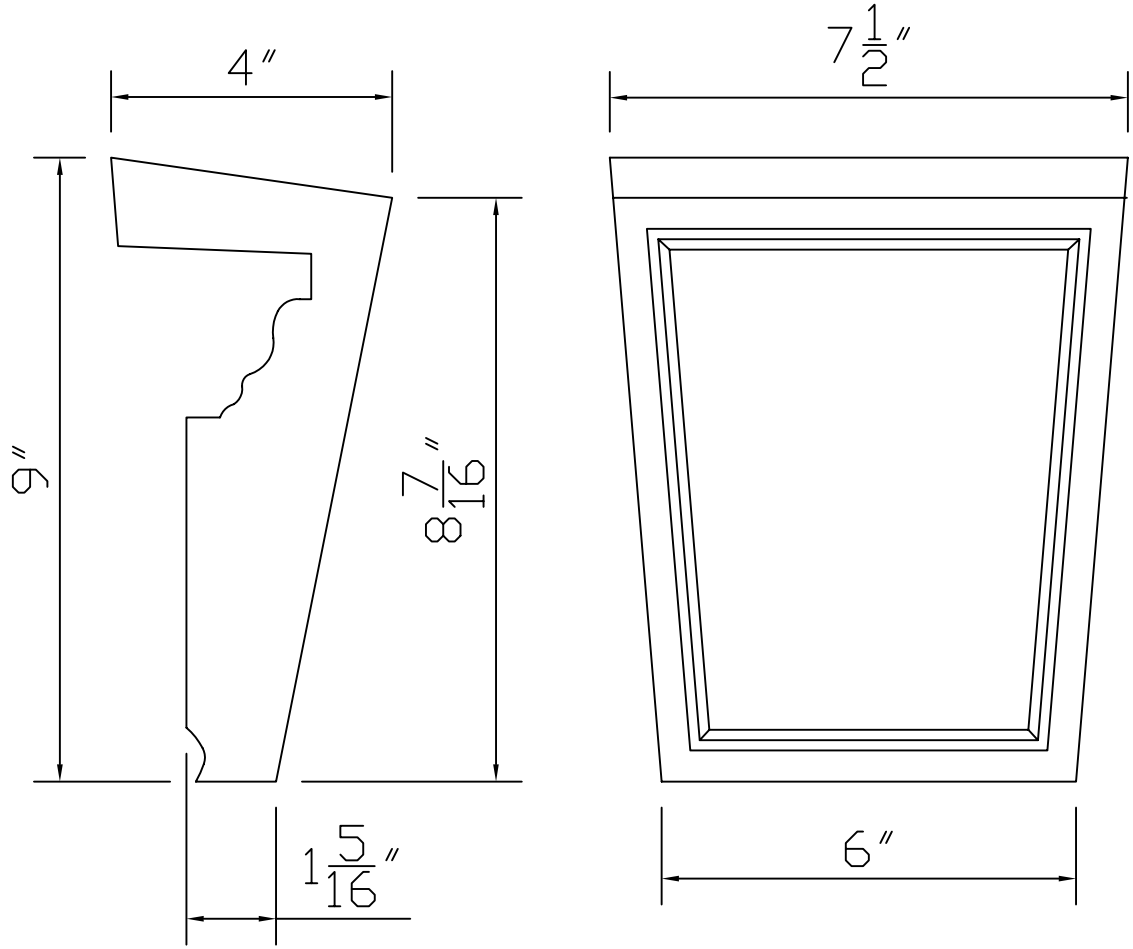

Name:	KEYSTONE
Dimensions:	Base 6" , Top 7 1/2" , P 4"
Material:	Polyurethane

Part Number: E401	Date:	05/04/03
	Scale:	Not to scale
	Drawn By:	MS

ARCHITECTURAL ORNAMENT

PROPERTY OF

ARCHITECTURAL ORNAMENT INC.

Design Copyright © Architectural Ornament Inc. 2005. All rights reserved

55 BRADWICK DRIVE
CONCORD, ONTARIO
L4K 1K5

PHONE: (905) 738-9459
800-567-3554

FAX : (905) 738-6734
800-567-4489

www.architectural-ornament.com