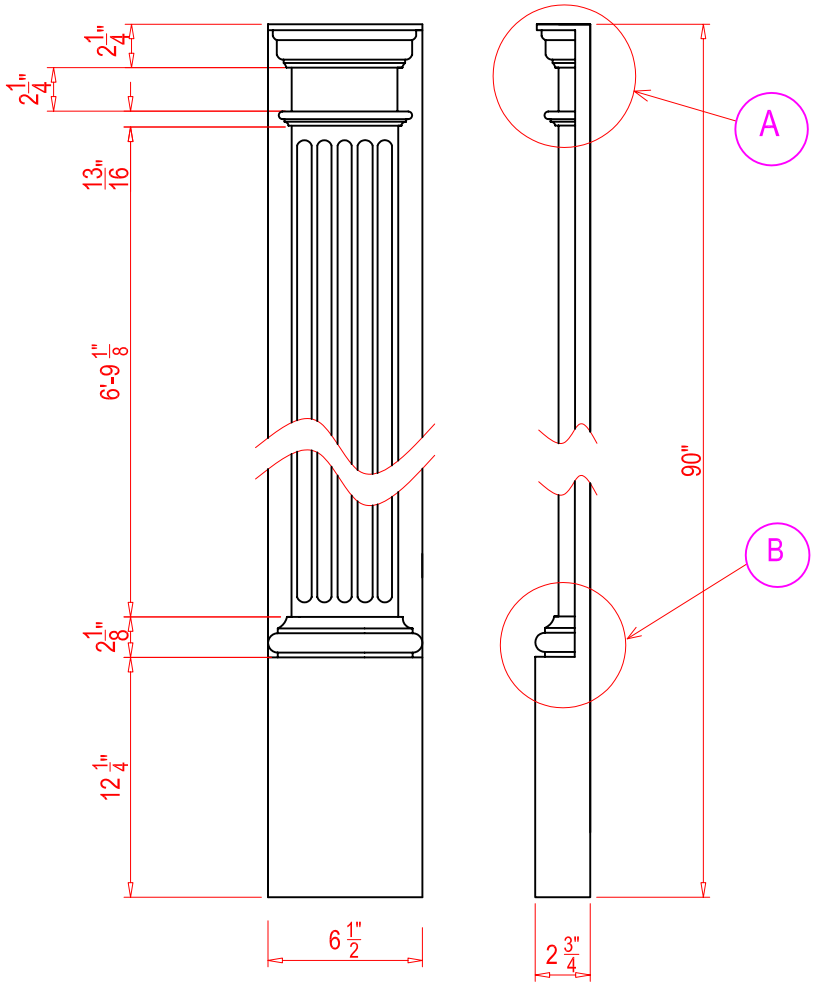

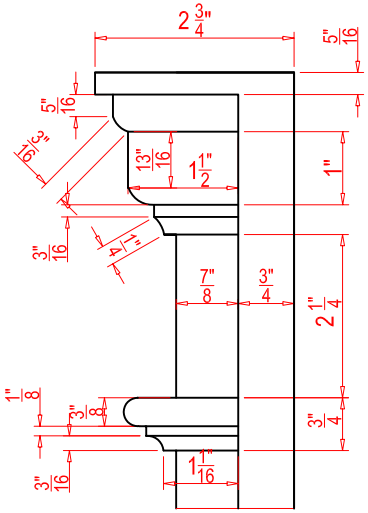

TOP DETAIL A

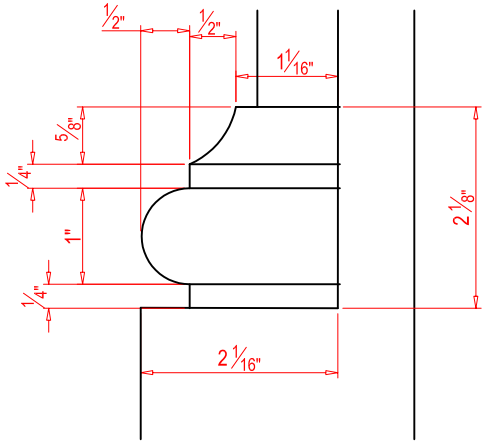

BOTTOM DETAIL B

Name:	Pilaster (w/BackBoard)
Dimensions:	H90" x W6 1/2" x P2 3/4"
Material:	Polyurethane

Part Number: E680	Date:	07/30/03
	Scale:	Not to scale
	Drawn By:	JR

ARCHITECTURAL ORNAMENT

PROPERTY OF

ARCHITECTURAL ORNAMENT INC.

Design Copyright © Architectural Ornament Inc. 2005. All rights reserved

55 BRADWICK DRIVE
CONCORD, ONTARIO
L4K 1K5

PHONE: (905) 738-9459
800-567-3554

FAX : (905) 738-6734
800-567-4489

www.architectural-ornament.com